BEECH OVENS™
WORLD LEADER IN SPECTACULAR COOKING EQUIPMENT

36 Gladys Street, Stones Corner,
Queensland, Australia, 4120
Tel: (617) 3397 0277
Fax: (617) 3397 0030
e-Mail: sales@beechovens.com.au
Web: www.beechovens.com
ABN 14 115 371 741

PRODUCT

MANUFACTURER

BEECH OVENS

MODEL NUMBER

TBR0500 *(500 Series)* / TBR0700 *(700 Series)*

PRODUCT DESCRIPTION

Barrel Tandoor – Charcoal, Gas or Electric

Ext Diameter:	Int Diameter:	Height:
900mm/1100mm.	500mm/700mm.	900mm.

MANUFACTURED IN AUSTRALIA
www.beechovens.com

SPECIFICATIONS

Purpose	Charcoal, Gas or Electric fired Tandoor oven for cooking Naan Bread and foods on skewers.
Construction	High grade castable ceramic or mild steel inner surrounded by compacted insulation encased in 3mm steel outer housing. Triple insulated 5mm mild steel base with high grade tile floor and castable lower firing chamber.
Firing Type	Charcoal, Gas or Electric.
Gas/Electric	Gas - 60Mj (56869 BTU) NAT / LPG *(Dual ring Cast iron Burner).* Electric – 11Kw, 380V-450V 3 Phase.
Exhaust Requirements	Under Canopy/Exhaust Hood.
MEP Ratings	Gas Connection – 15mm *(1/2")* gas connection line. Electrical *(for Gas Fired)* – N/A. Electrical *(Electric Fired)* – 5 core supply cable to main control cabinet, no neutral. Thermocouple cable *(supplied)* to be connected in control cabinet upon connection.
Capacity	Internal surface area approx. 0,75m2 *(500 Series)* - 1.01m2 *(700 Series).* Capacity varies between Naan size and operator.
Accessories	SS Hook, Spade, Lid, Ash Scraper *(Charcoal),* 10 x SS Skewers, Analogue Thermometer. Optional Castor trolley *(2 models available)* Optional Sarj/Roti Top Optional Downdraft top *(Electric ONLY)* Optional Skewer rack *(Freestanding or Wall mounted – holds approx. 10 skewers)* Optional 2 and 3 station common stone top supports *(stone by others – cut detail provided)*
Safety	Oven and associated systems are CE and UL compliant. UL Tested to Subject 2162 *(Charcoal/Gas Fired).* Complies to USA "ANSI-NSF standard 4" Exterior temperatures below 50°C. Compliant Gas systems with flame failure device.
Special Requirements	Should be installed under an approved exhaust system (Canopy or Hood) Floor surface and substrate to be constructed using non-combustible materials extending 800mm. Immediate surrounding area to be constructed using non-combustible materials.

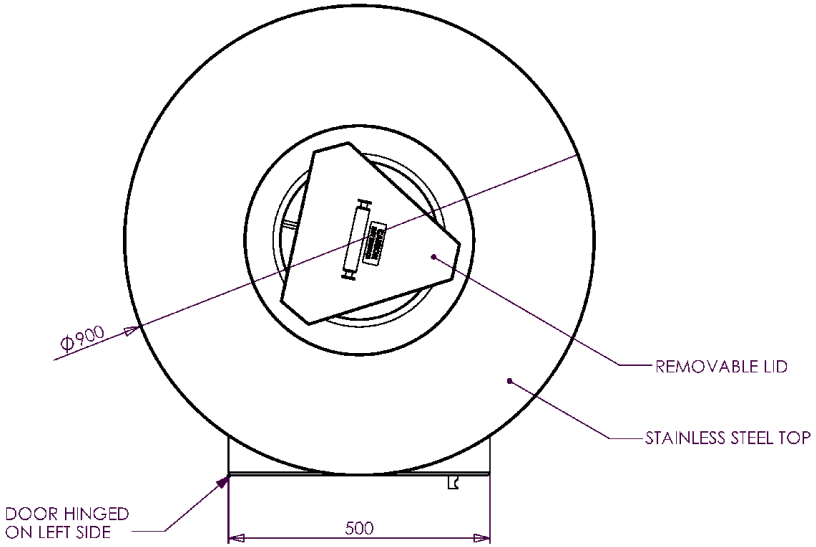

SERVICES REQUIRED

- GAS HEAT INPUT 60Mj (56000 BTU)
- 15mm (1/2") GAS LINE CONNECTION
- ELECTRIC TANDOOR - 11Kw - 380-450V 3 PHASE (NO NEUTRAL)
- EXHAUST DUCTING/CANOPY IN ACCORDANCE WITH LOCAL REGULATIONS

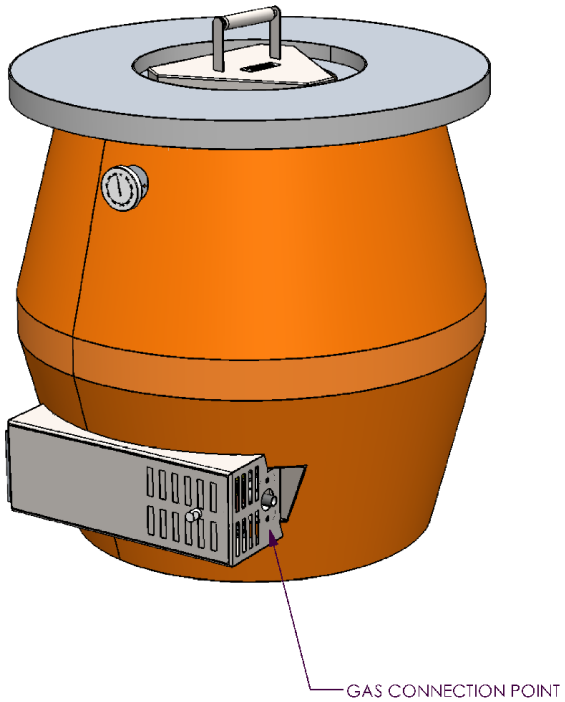

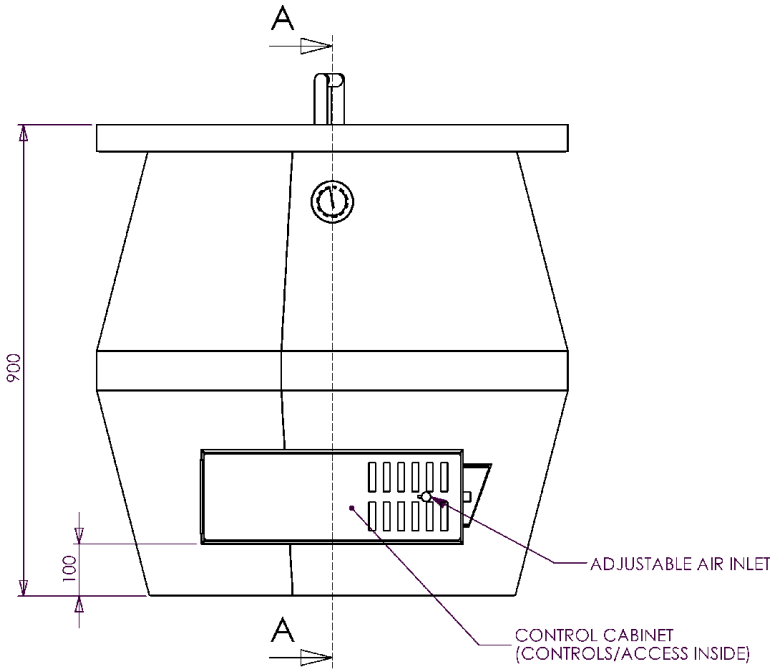

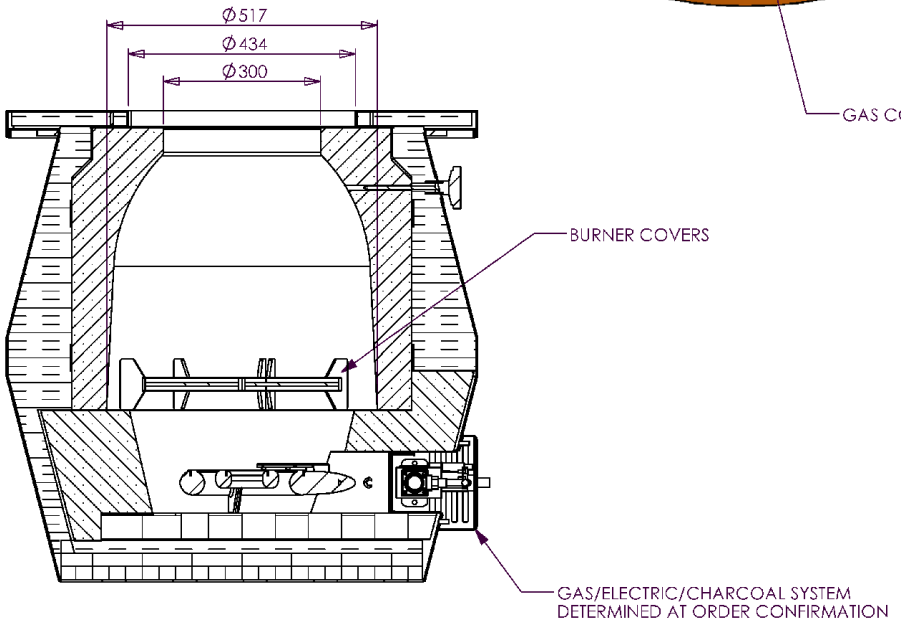

SECTION A-A

REV.	DESCRIPTION OF CHANGES	DATE	CHANGED BY
0	ISSUED FOR CONSTRUCTION		

LAST EDITED: Tuesday, 25 October 2011 2:12:31 PM

©Copyright 2006 Beech Ovens Pty Ltd. All rights reserved.

BEECH OVENS
Australia
(617) 3397 0277

Drawn	Checked	Scale	Date
S Trood		1:10	25/10/2011

TANDOOR BARREL Ø500mm INTERNAL
TERRACOTTA FINISH
STANDARD

A3

NTS - SITE MEASURE

TBR0500-1000 - BASIC DETAILS

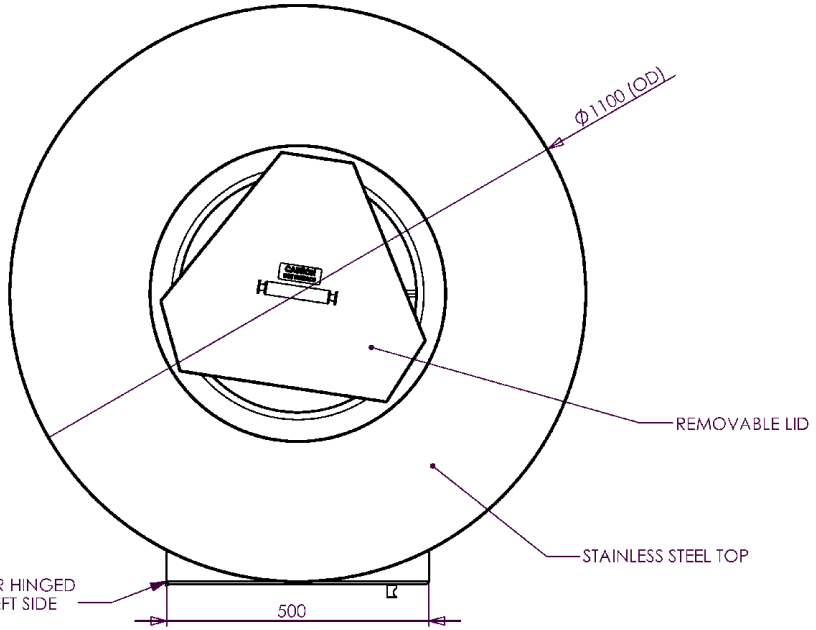

SERVICES REQUIRED

- GAS HEAT INPUT 60Mj (56000 BTU)
- 15mm (1/2") GAS LINE CONNECTION
- ELECTRIC CONNECTION - 11Kw - 380-450V 3 PHASE (NO NEAUTRAL)
- EXHAUST DUCTING/CANOPY IN ACCORDANCE WITH LOCAL REGULATIONS

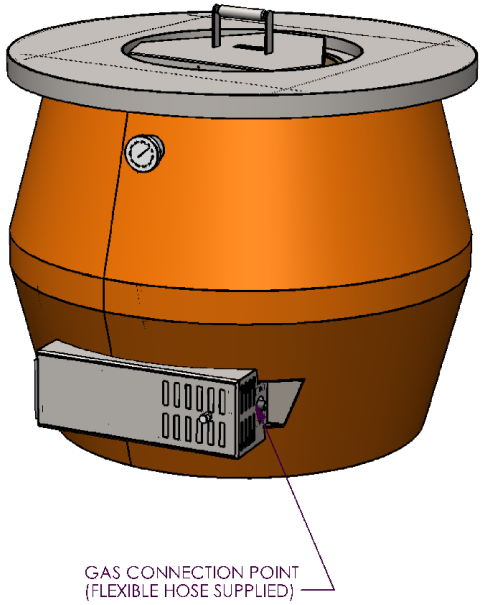

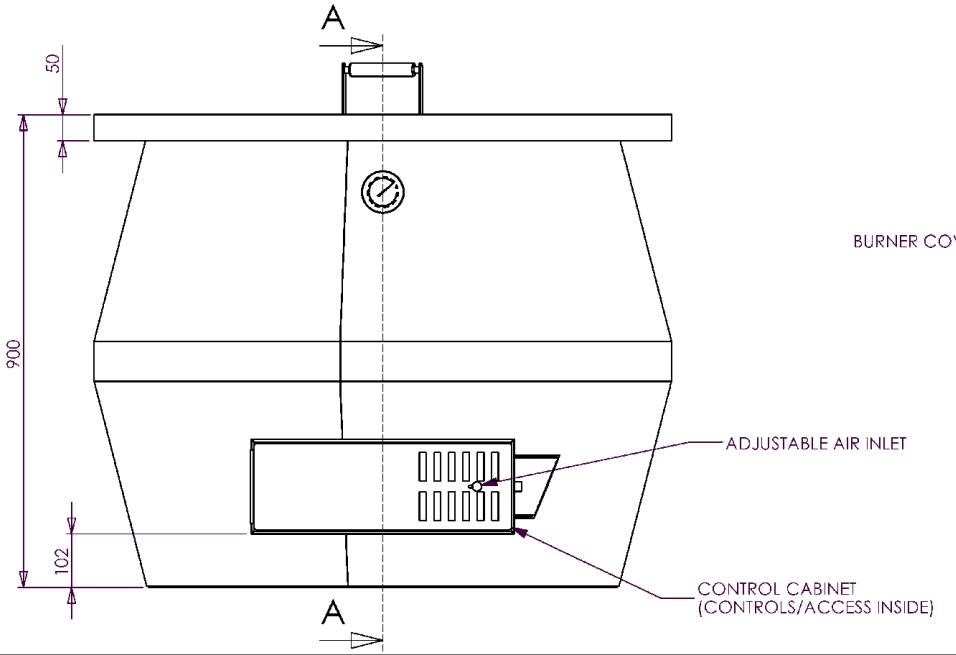

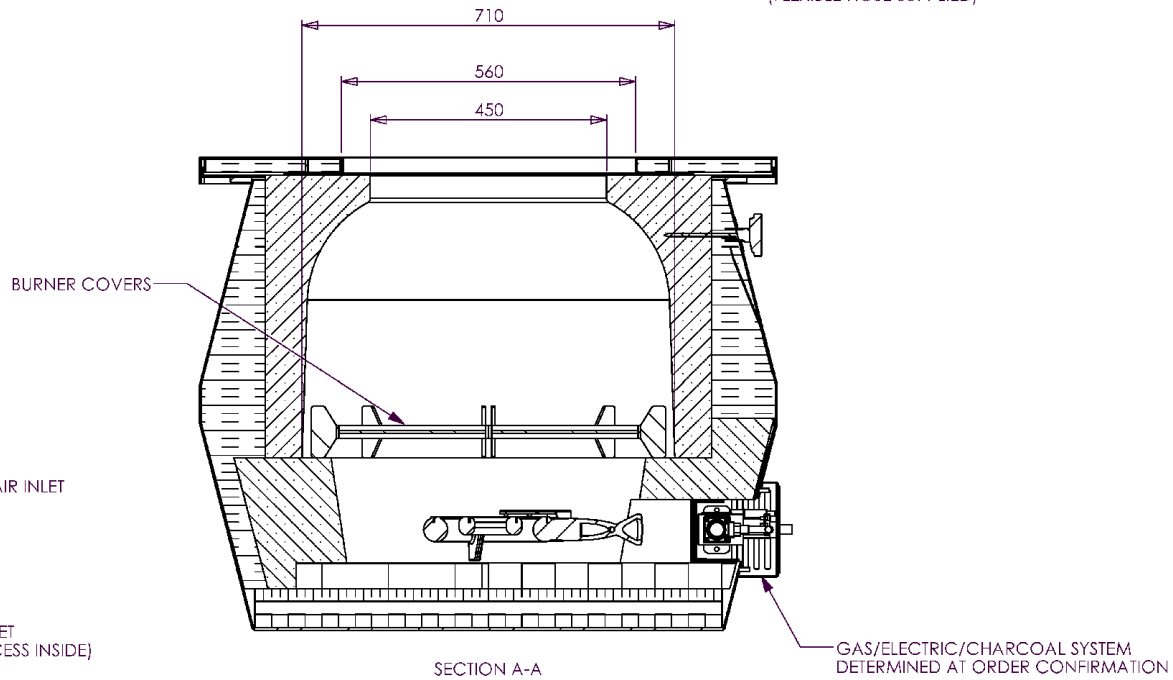

SECTION A-A

REV.	DESCRIPTION OF CHANGES	DATE	CHANGED BY
0	ISSUED FOR CONSTRUCTION		

LAST EDITED: Tuesday, 25 October 2011 2:16:48 PM

©Copyright 2006 Beech Ovens Pty Ltd. All rights reserved.

BEECH OVENS
Australia
(617) 3397 0277

Drawn	Checked	Scale	Date
S Trood		1:10	25/10/2011

TANDOOR BARREL Ø700mm INTERNAL
TERRACOTTA FINISH
STANDARD

A3

NTS - SITE MEASURE

TBR0700-1000 - BASIC DETAILS